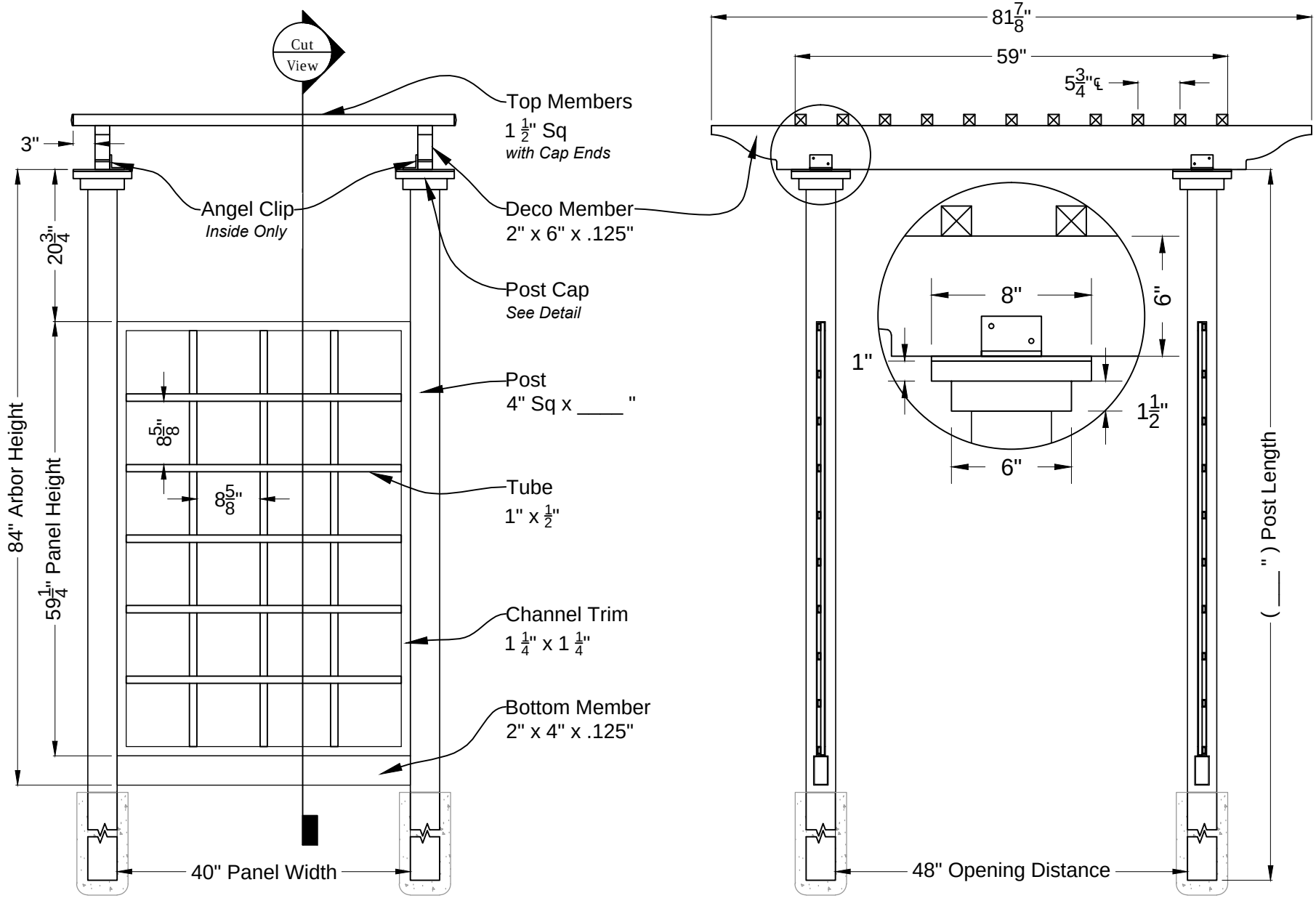

iDeal aluminum
fence gates railing
Phone: 386-736-1700 / Fax: 386-822-4950
www.iDeal-ap.com

HORIZON_ARBOR_48"O X 84"H